Electrolux PROFESSIONAL

Coffee System Aura Traditional espresso machine, 2 Maestro groups

ITEM #

MODEL #

NAME #

SIS #

AIA #

602522 (AURA2)	Traditional espresso machine, 2 Maestro groups, 10,1 liter boiler, 2 independent control boxes with 4 programmable dosing program

Short Form Specification

Item No.

The professional semi-automatic AURA line owns all the technical features of a high-end traditional espresso machine, offering the perfect harmony of aesthetics and performance. With its modern design of stainless steel and chrome, the AURA displays an assertive silhouette underlined with LED lighting of the tray grill and around the electronic control boxes with touchscreen interface for an intuitive programming. AURA is dedicated to users familiar with volumetric commands that address high performance and consistency in the extraction process. The MAESTRO thermo-regulated brew groups are fitted with the EASYLOCK system that help locking and sealing the portafilter with minimal effort. The AURA line offers a set of advanced technologies that warrant an outstanding coffee extraction quality and a strong hot water/steam power.

APPROVAL:

Main Features

- Programmable water and steam.
- Automatic cleaning cycle.
- The professional semi-automatic AURA line owns all the technical features of a high-end traditional espresso machine, offering the perfect harmony of aesthetics and performance.
- Modern design of stainless steel and chrome, the AURA displays an assertive silhouette underlined with LED lighting of the tray grill and around the electronic control boxes with touchscreen interface for an intuitive programming.
- Manual Steamglide lever.
- AURA is dedicated to users familiar with volumetric commands that address high performance and consistency in the extraction process.
- The MAESTRO thermo-regulated brew groups are fitted with the EASYLOCK system that help locking and sealing the portafilter with minimal effort.
- 2 Maestro groups.
- 2 independent control boxes with 4 programmable dosing selection, start/stop, shot time display.
- Electronic pre infusion.
- Double paneled cup warmer with large capacity.
- USB interface for update.

Construction

- Stainless steel body.
- PID (proportional-integral-derivative) Temperature control: a precise controller algorithm system that gives consistency and accuracy to brewing temperature management system.
- 10.1 liter boiler.
- Easylock portafilter.
- RS-232 protocol for computer/cashier interface.

Included Accessories

- 1 of Aura filter holder for one cup PNC 871008
- 2 of Aura filter holder for two cups PNC 871009

Optional Accessories

- Doser Coffee Grinder, flat, 65mm PNC 602543 ❑
- Doser Coffee Grinder, flat, 75mm PNC 602544 ❑
- Grind-on-demand Coffee Grinder, flat, 75mm PNC 602546 ❑
- Aura filter holder for one cup PNC 871008 ❑
- Aura filter holder for two cups PNC 871009 ❑

• Cold touch steam wand only for machines without Steamair	PNC 871010	❑
• Cappuccinatore/foamer device with two positions for hot milk and for foam only for machines without Steamair	PNC 871011	❑
• Cappuccino system/auto foam device by air injection for traditional machines only for machines without Steamair	PNC 871012	❑
• Teflon steam wand only for machines without Steamair	PNC 871013	❑
• Filter for one cup, 12 gr	PNC 871017	❑
• Filter for two cups, 18 gr	PNC 871018	❑
• Stainless steel knock box drawer	PNC 871019	❑
• Raised feet kit	PNC 871041	❑

The company reserves the right to make modifications to the products without prior notice. All information correct at time of printing.

Coffee System
Aura Traditional espresso machine, 2 Maestro groups

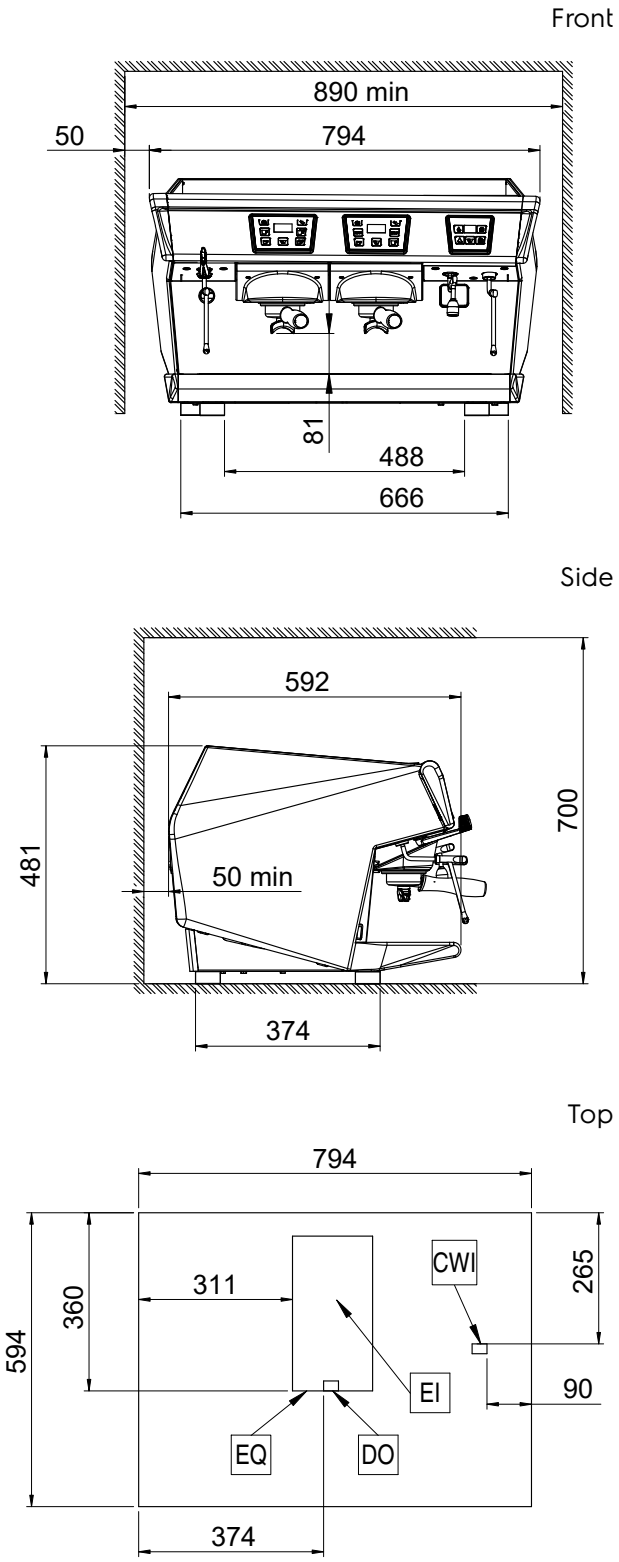

Electric

Supply voltage:	
602522 (AURA2)	400 V/3N ph/50 Hz
Electrical power max.:	4.8 kW
Plug type:	Cable without plug

Water:

Cold water temperature (min/max):	5 / 60 °C

Key Information:

External dimensions, Width:	794 mm
External dimensions, Depth:	592 mm
External dimensions, Height:	490 mm
Net weight:	73 kg
Shipping volume:	0.69 m³

Sustainability

Current consumption:	7.2 Amps

The company reserves the right to make modifications to the products without prior notice. All information correct at time of printing.

2024.10.08